产品接线图

Product Wiring Diagram

高端锂电池均衡保护板

Premium Lithium Battery Balancing Protection Board

适用型号：(3-32)S(40-300)A

Product Models：(3-32)S(40-300)A

目录

一、电压采集线接线注意事项Precautions for wiring voltage acquisition lines 3
（一）电压采集线说明Description of the voltage acquisition line 3
（二）外部接线说明External wiring instructions 4
二、电压采集线接线图Voltage acquisition line wiring diagram 5
（一）A系列（3-16串）BMS板型接线图BMS Board Type Wiring Diagram for A Series (3-16 Strings) 5
（二）B系列（13-18串）BMS板型接线图（未使用）B Series (13-18 strings) BMS board wiring diagram (unused) 19
（三）C系列（16-24串）BMS板型接线图BMS Board Type Wiring Diagram for C Series (16-24 Strings) 25
（四）D系列（21-32串）BMS板型接线图BMS Board Type Wiring Diagram for D Series (21-32 Strings) 31

一、电压采集线接线注意事项Precautions for wiring voltage acquisition lines

（一）电压采集线说明Description of the voltage acquisition line

1.1、保护板B0对应的那条排线为接线的第一条排线（线材为黑色，接B-）；The wire corresponding to the B0 protective board is the first wiring line (black wire, connected to B-).

1.2、第2根线（线材为白色）连接**第1串电池正极**，后面低次连接每一串电池的正极，直到最后一串B+（线材为红色，接B+）。The second wire (white) connects to the positive terminal of the first battery string, then sequentially links to the positive terminals of subsequent strings until the final B+ string (red wire, connected to B+).

1.3、焊排线时排线切不可插在保护板上面去焊接。接线一定要按照顺序去接，排线接错，可能会导致保护板烧坏和无法正常工作。Never insert the wire harness into the protective panel for welding. Always follow the correct wiring sequence, as incorrect wiring may cause the protective panel to burn out or malfunction.

1.4、排线接好后，插头不要直接插入，要测试插头背面每2个相邻金属端子间的电压，注意确认每串电池电压相差要低于0.05V。After wiring, avoid direct insertion of the plug. Instead, test the voltage between every two adjacent metal terminals on the back of the plug, ensuring the voltage difference between each battery string is less than 0.05V.

1.5、15串以上的保护板，在接好排线的情况下，请注意保护板的两个排线插头**绝对不可以插反，插反会直接烧板；**排线是**先插有B-黑色线材的低压排线**，再插**另一个有B+红色线材的高压排线**。For protection boards with 15 or more strings, ensure the two wiring connectors are never inserted backwards after completing the wiring. Reversal will cause immediate board burnout. The wiring sequence requires inserting the low-voltage string (B-black wire) first, followed by the high-voltage string (B+ red wire).

1.6、保护板接好线之后，**电池总电压与保护板输出电压相等**，才代表接线正确，此时才可以进行充放电使用。After the protective board is properly wired, the battery's total voltage must equal the output voltage of the board to confirm the wiring is correct. Only then can the device be charged and discharged.

1.7、使用中注意引线头、电烙铁、锡渣等不要碰到电路板上的元器件，否则易损坏本保护板。During operation, avoid contact between the lead terminals, soldering iron, or solder residue and circuit board components, as this may damage the protection board.

（二）外部接线说明External wiring instructions

2.1、**B-接口应接电池总负极（一般为粗黑线）；C-接口对应接充电器或者负载的总负极（一般为黑色粗线）。The B-port connects to the battery's main negative terminal (typically a thick black wire), while the C-port connects to the charger's or load's main negative terminal (usually a thick black wire).**

2.2、焊接电池引线时，一定不可有错接或反接。如果确认已接错，这块电路板可能已损坏，需要重新测试合格后才可使用。When soldering battery leads, never connect them incorrectly or in reverse. If a connection error is detected, the circuit board may be damaged and must be retested before reuse.

2.3、装配时保护板不要直接接触到电芯表面，以免损坏电芯。装配要牢固可靠。During assembly, avoid direct contact between the protective plate and the battery cell surface to prevent damage. Ensure the assembly is secure and reliable.

2.4、保护板和电池组组装作业时，勿将散热铝板靠近电芯表面，否则热量会传递给电芯，影响电池组安全。During the assembly of the protective plate and battery pack, avoid placing the aluminum heat sink near the cell surface, as this may cause heat transfer to the cell and compromise the battery pack's safety.

2.5、**故障排除：电池组和保护板组合好以后，首次上电如发现无电压输出或充不进电，请检查接线是否正确。Troubleshooting: After assembling the battery pack and protection board, if no voltage output or charging fails during the first power-up, check the wiring for accuracy.**

（三）C系列（13-24串）BMS板型接线图BMS Board Type Wiring Diagram for C Series (13-24 Strings)

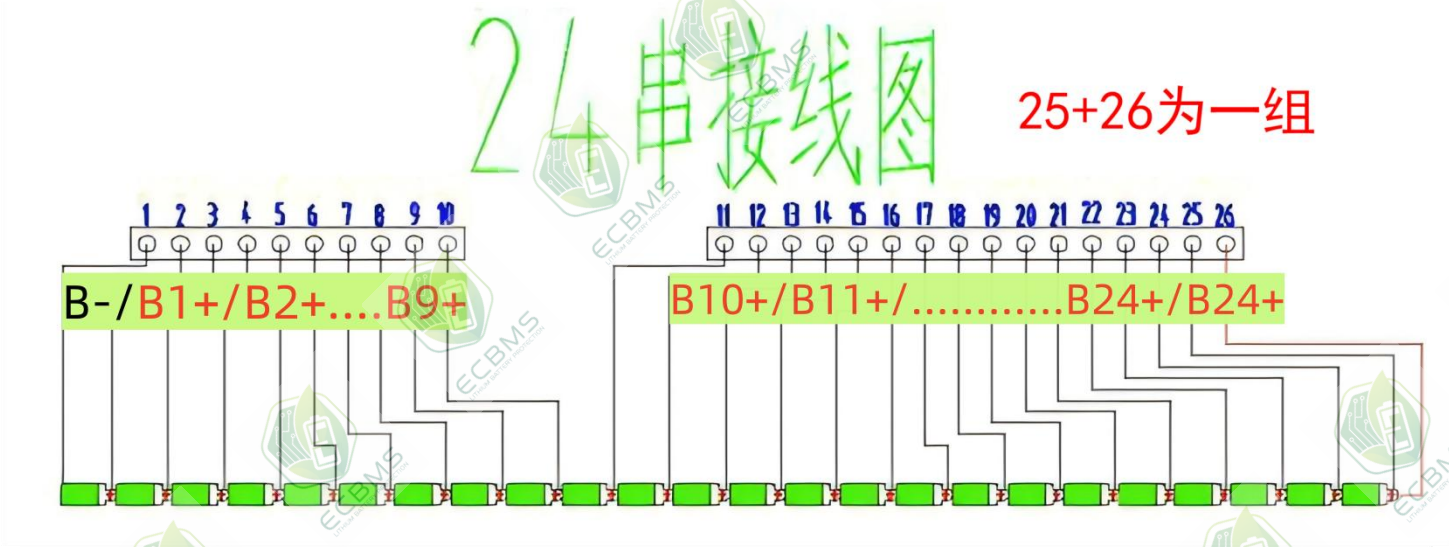

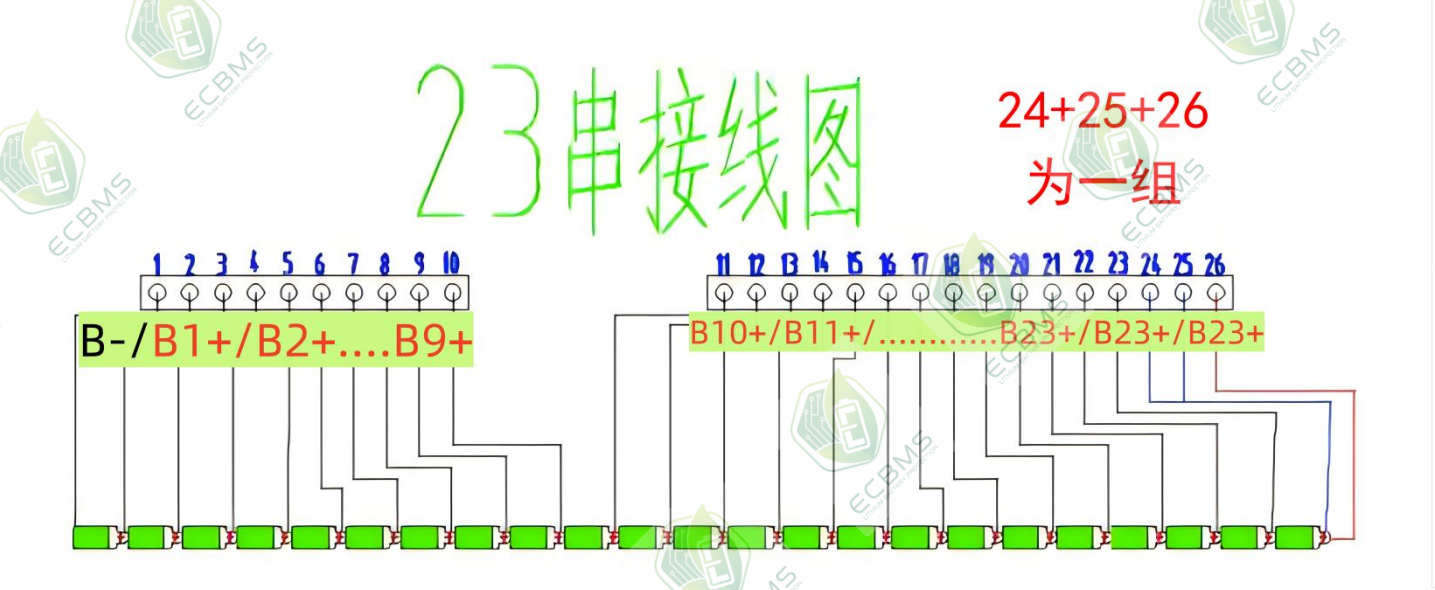

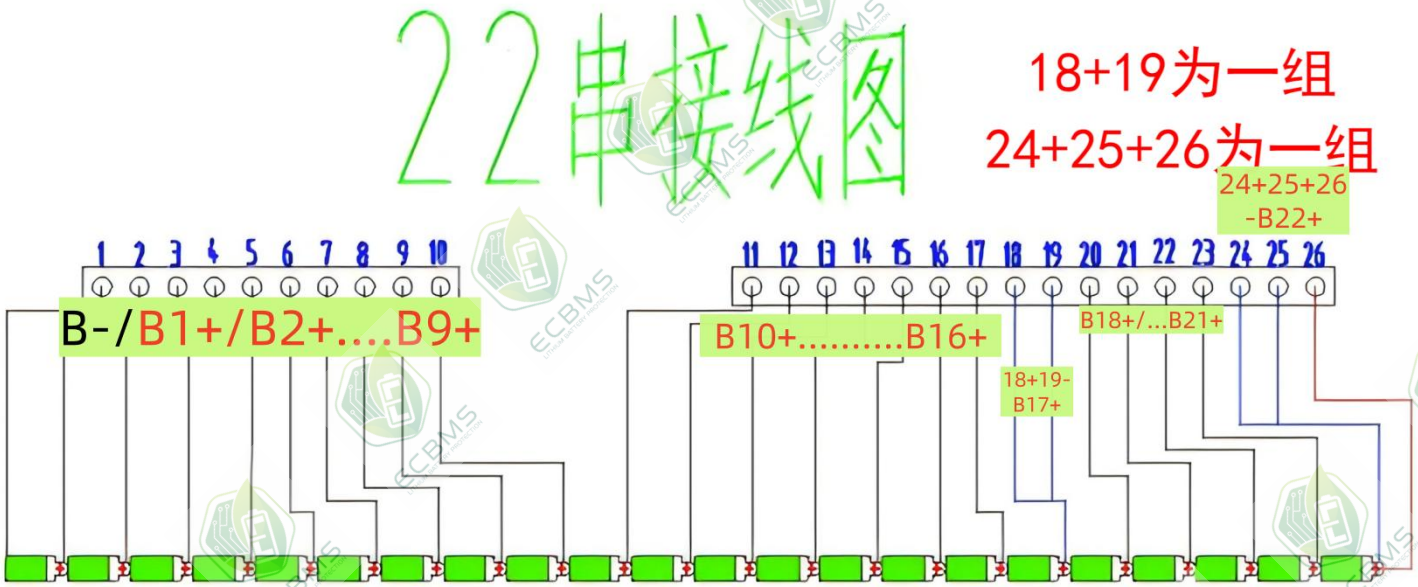
22串接线图
18+19为一组
24+25+26为一组
1 2 3 4 5 6 7 8 9 10
11 12 13 14 15 16 17 18 19 20 21 22 23 24 25 26
B-/B1+/B2+....B9+
B10+.....B16+
18+19-
B17+
B18+/...B21+
24+25+26
-B22+

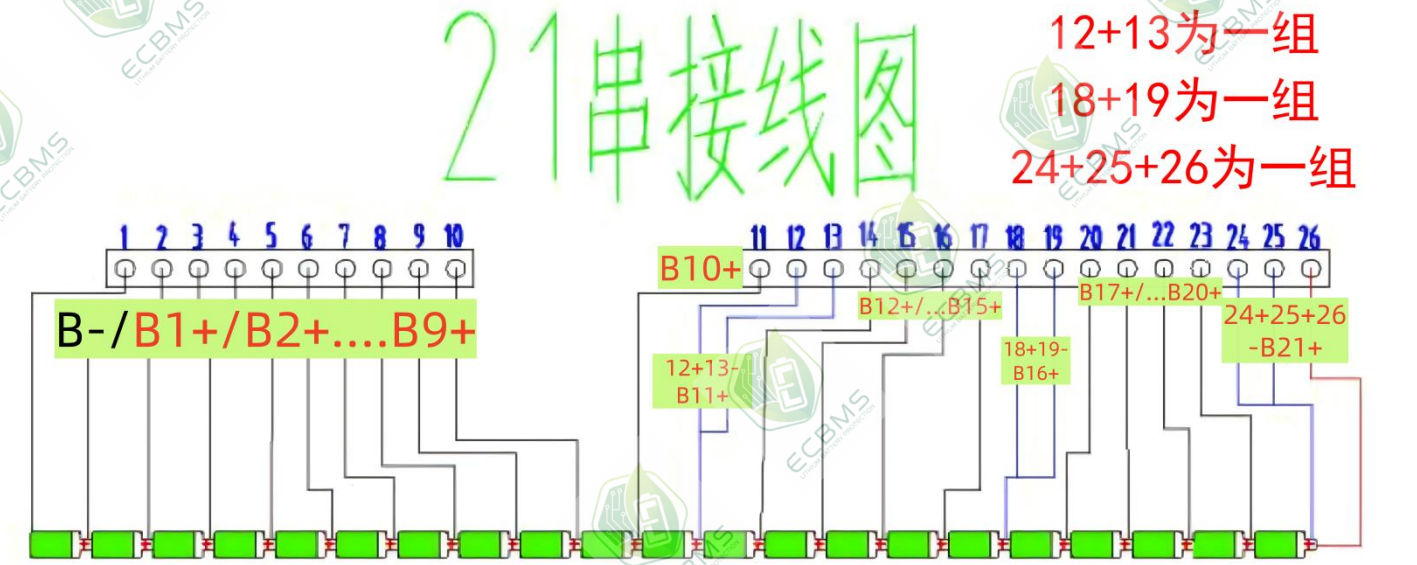
21串接线图
12+13为一组
18+19为一组
24+25+26为一组
1 2 3 4 5 6 7 8 9 10
11 12 13 14 15 16 17 18 19 20 21 22 23 24 25 26
B-/B1+/B2+....B9+
B10+
12+13-
B11+
B12+/...B15+
18+19-
B16+
B17+/...B20+
24+25+26
-B21+

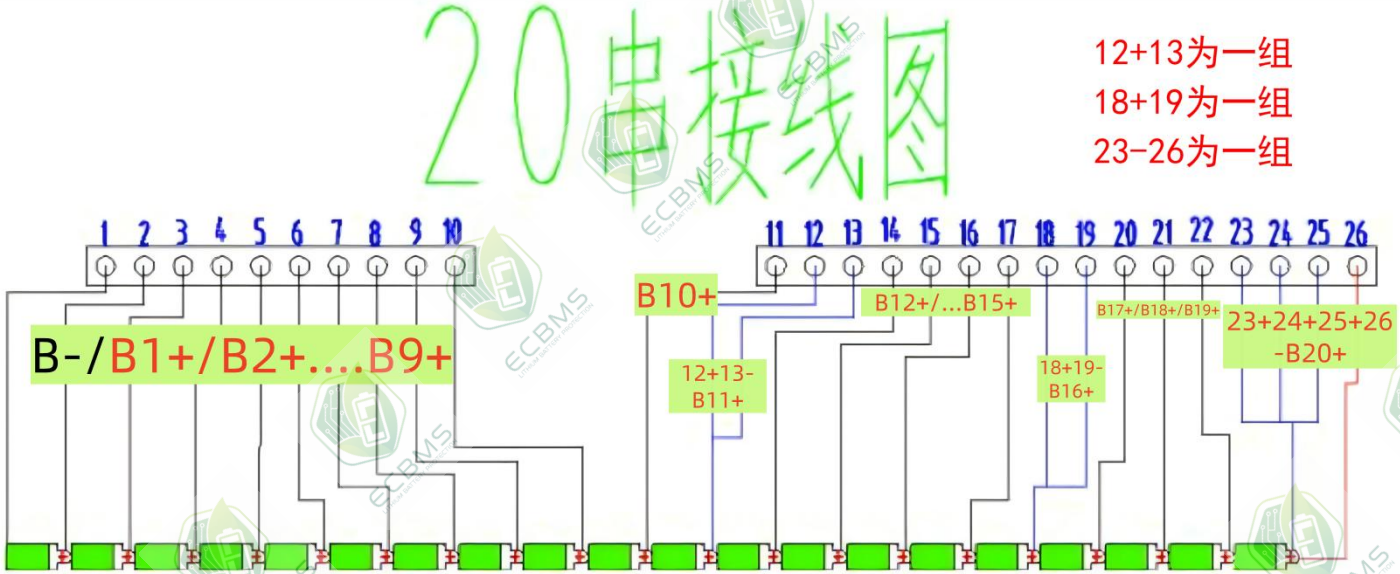
20串接线图
12+13为一组
18+19为一组
23-26为一组
1 2 3 4 5 6 7 8 9 10
11 12 13 14 15 16 17 18 19 20 21 22 23 24 25 26
B-/B1+/B2+....B9+
B10+
12+13-
B11+
B12+/...B15+
18+19-
B16+
B17+/B18+/B19+
23+24+25+26
-B20+

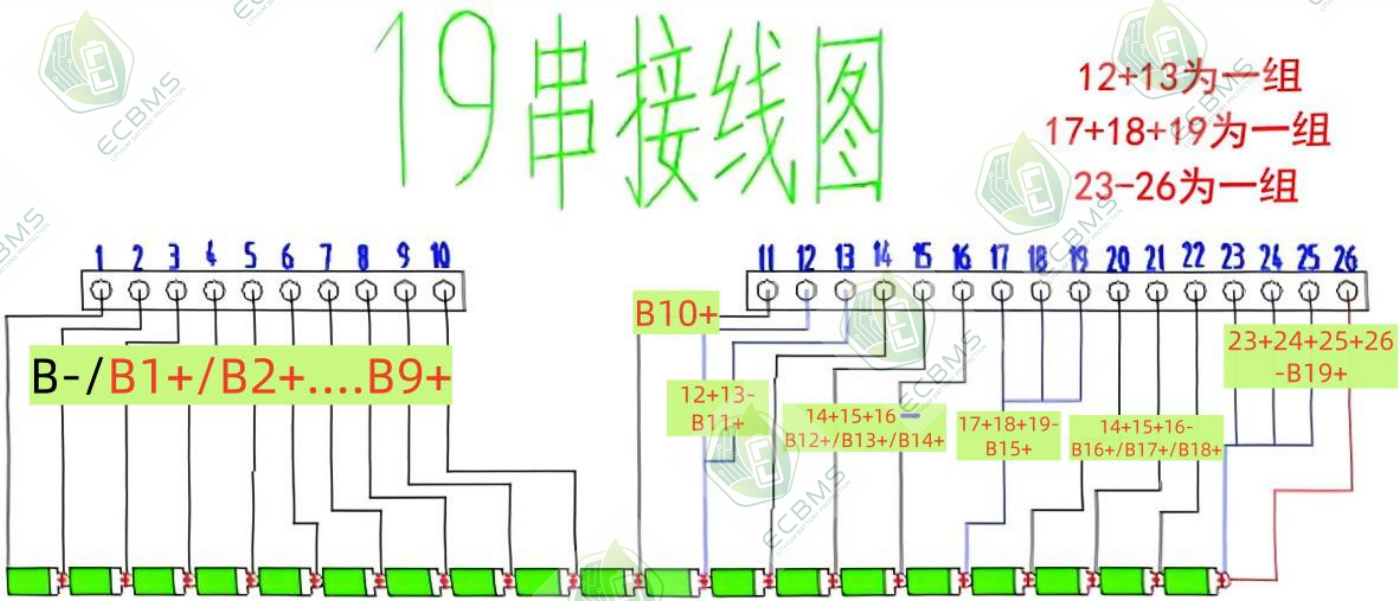
19串接线图
12+13为一组
17+18+19为一组
23-26为一组
1 2 3 4 5 6 7 8 9 10
11 12 13 14 15 16 17 18 19 20 21 22 23 24 25 26
B-/B1+/B2+....B9+
B10+
12+13-
B11+
14+15+16-
B12+/B13+/B14+
17+18+19-
B15+
14+15+16-
B16+/B17+/B18+
23+24+25+26
-B19+

18串接线图

11-13为一组
17-19为一组
23-26为一组

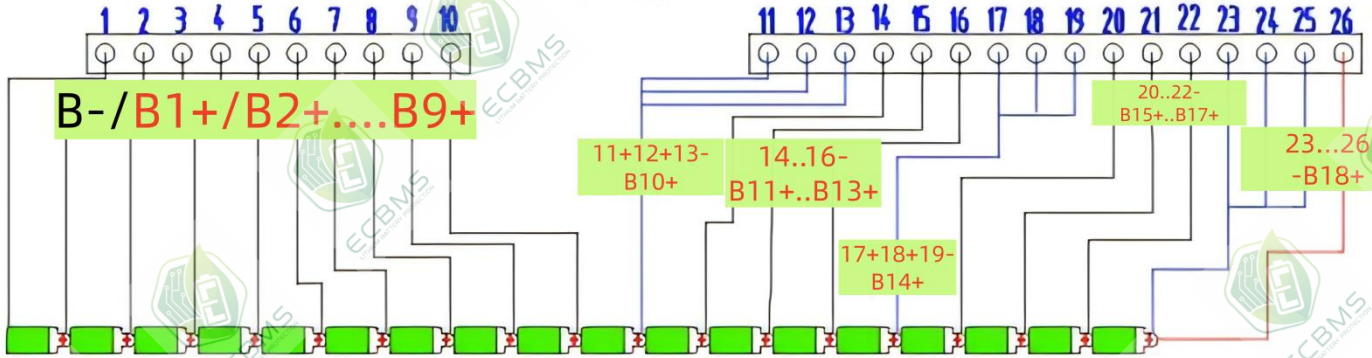

17串接线图

11-13为一组
17-19为一组
22-26为一组

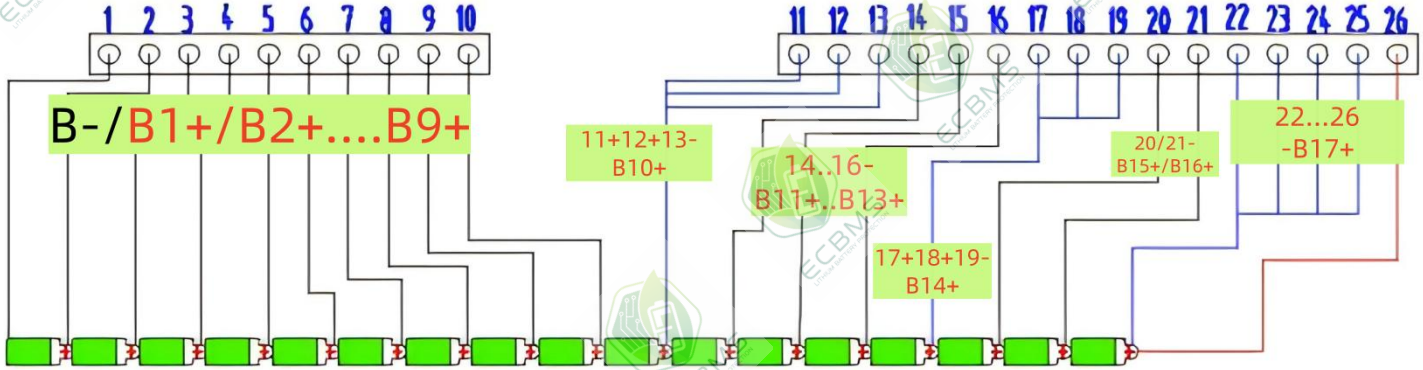

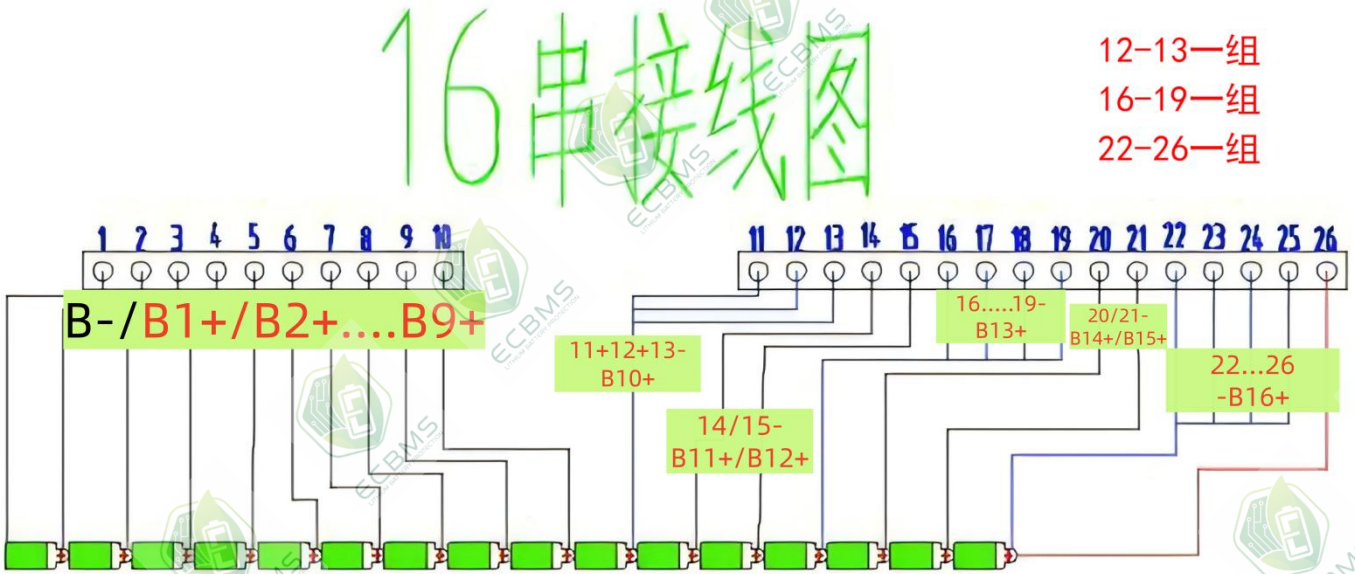
16串接线图
12-13一组
16-19一组
22-26一组
1 2 3 4 5 6 7 8 9 10
11 12 13 14 15 16 17 18 19 20 21 22 23 24 25 26
B-/B1+/B2+....B9+
11+12+13-B10+
14/15-B11+/B12+
16.....19-B13+
20/21-B14+/B15+
22...26-B16+

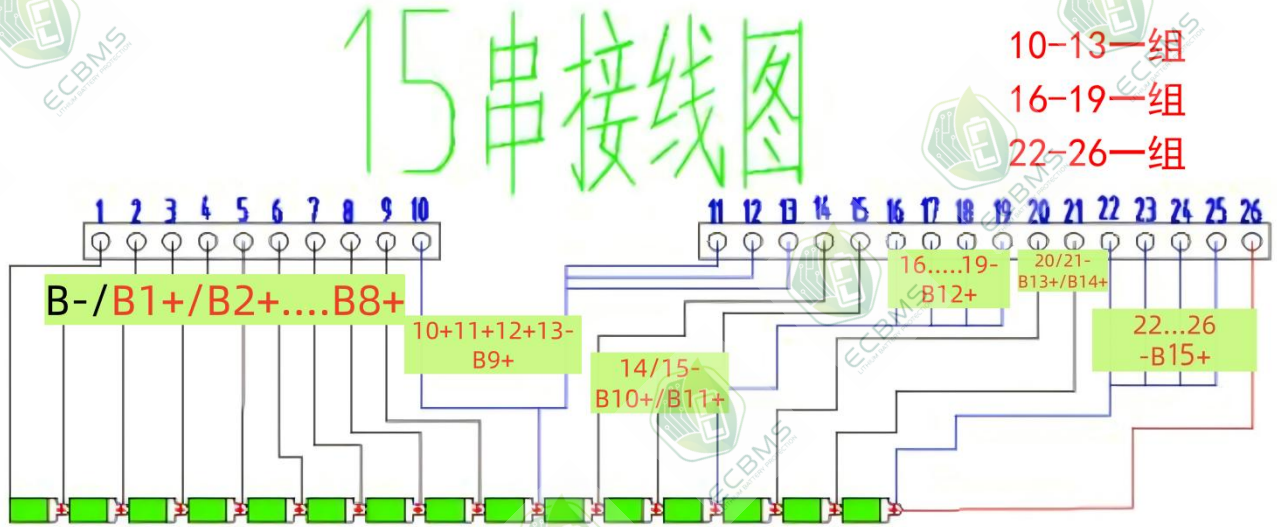
15串接线图
10-13一组
16-19一组
22-26一组
1 2 3 4 5 6 7 8 9 10
11 12 13 14 15 16 17 18 19 20 21 22 23 24 25 26
B-/B1+/B2+....B8+
10+11+12+13-B9+
14/15-B10+/B11+
16.....19-B12+
20/21-B13+/B14+
22...26-B15+

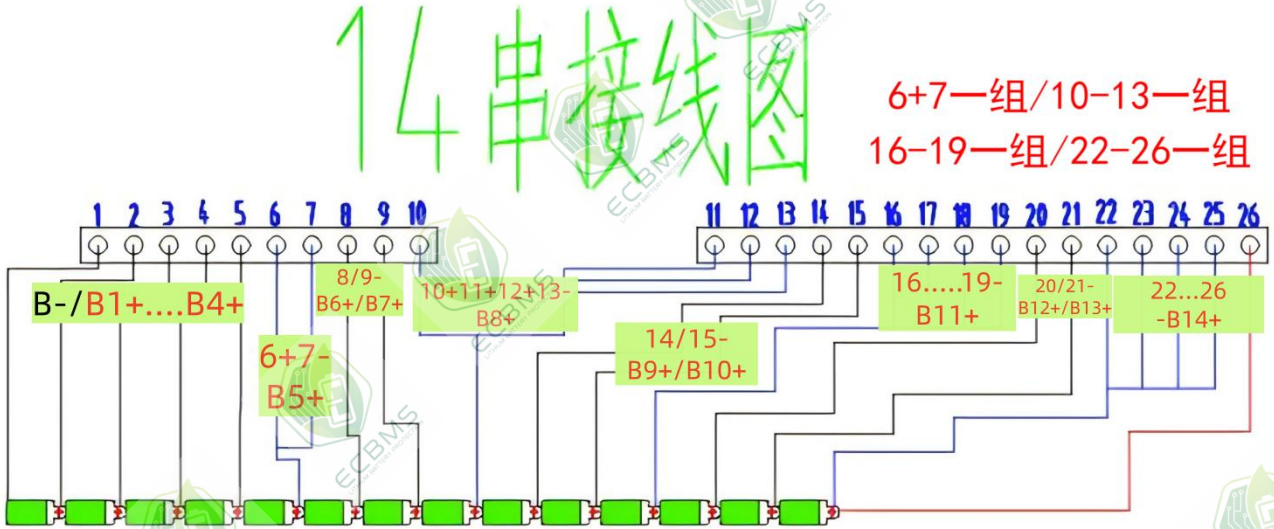
14串接线图
6+7一组/10-13一组
16-19一组/22-26一组
1 2 3 4 5 6 7 8 9 10
11 12 13 14 15 16 17 18 19 20 21 22 23 24 25 26
B-/B1+....B4+
6+7-
B5+
8/9-
B6+/B7+
10+11+12+13-
B8+
14/15-
B9+/B10+
16.....19-
B11+
20/21-
B12+/B13+
22...26
-B14+

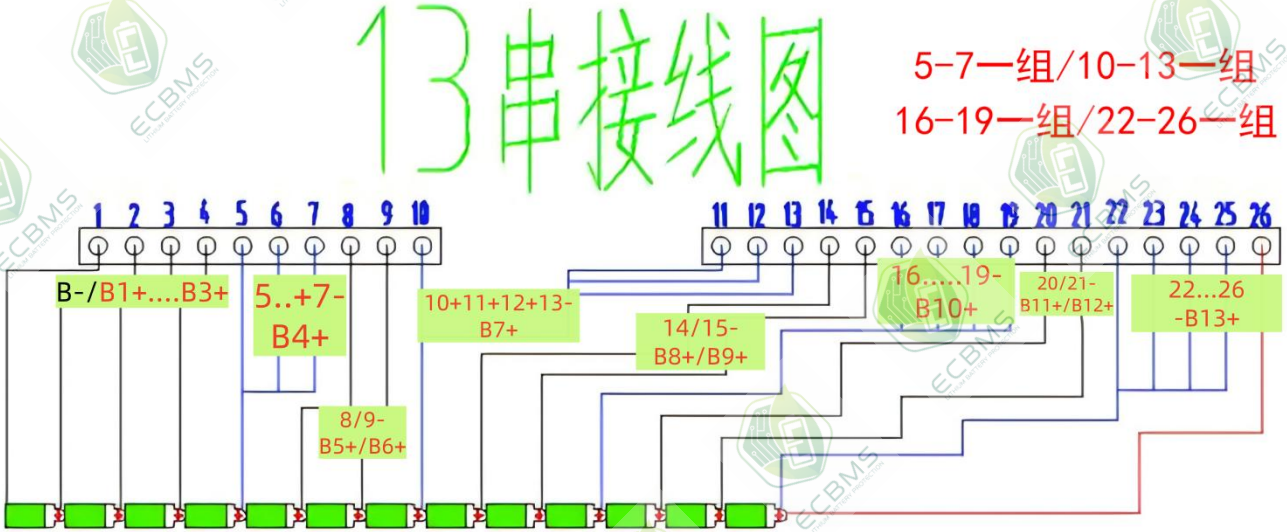
13串接线图
5-7一组/10-13一组
16-19一组/22-26一组
1 2 3 4 5 6 7 8 9 10
11 12 13 14 15 16 17 18 19 20 21 22 23 24 25 26
B-/B1+....B3+
5..+7-
B4+
8/9-
B5+/B6+
10+11+12+13-
B7+
14/15-
B8+/B9+
16.....19-
B10+
20/21-
B11+/B12+
22...26
-B13+